REV.	CHANGE CONTENT	BY	DATE

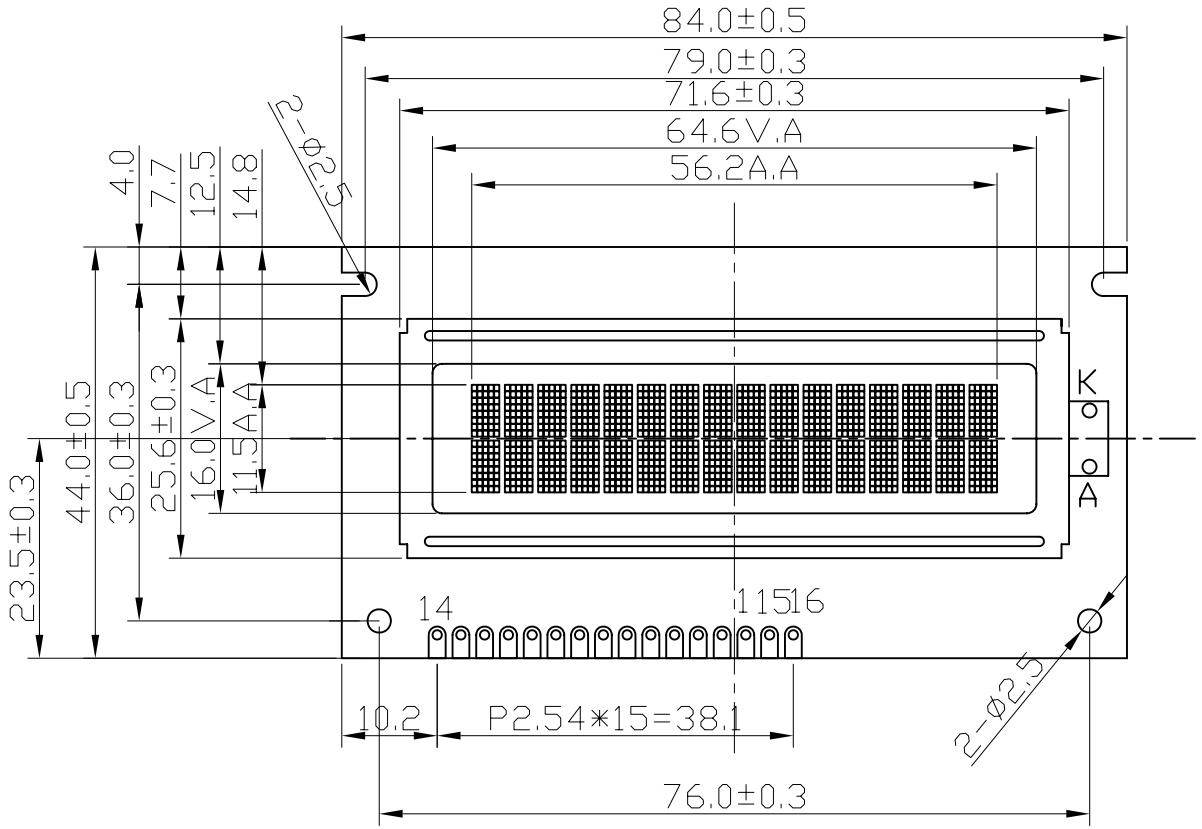

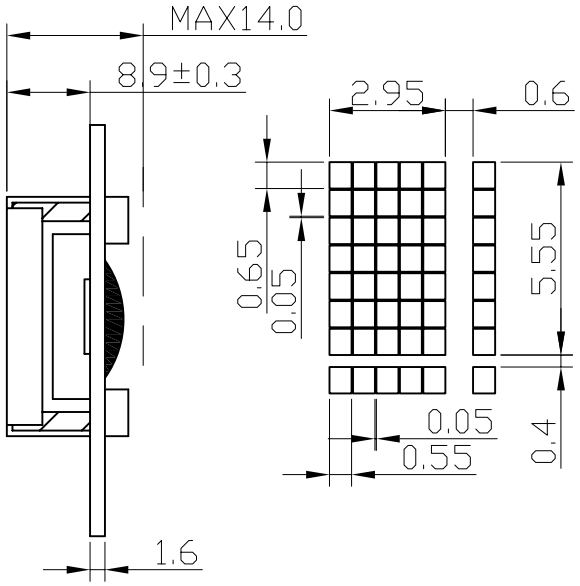

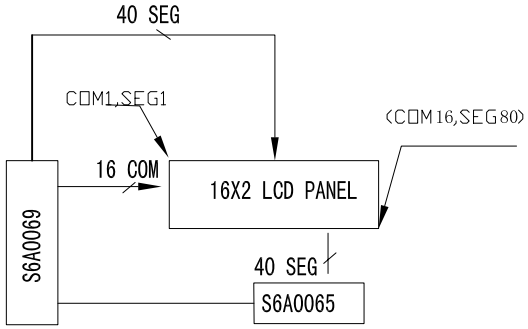

NOTE:
1. DISPLAY TYPE: STN-Y/G-POSITIVE
2. DISPLAY MODE: TRANSFLECTIVE
3. DRIVE METHOD: 1/16 DUTY, 1/5 BIAS, 4.6V Vop, 5V VDD
4. VIEWING DIR.: 6:00
5. OP. TEMP.: -20°C~70°C
6. ST. TEMP.: -30°C~80°C
7. BACKLIGHT: COLOR-Y/G, 5.0±0.2V, 130mA,MIN.80 CD/m²
8. DRIVER IC:S6A0069,S6A0065

PIN	1	2	3	4	5	6	7	8	9	10	11	12	13	14	15	16
SYMBOL	GND	VDD	V0	RS	R/W	E	D0	D1	D2	D3	D4	D5	D6	D7	LED+	LED-

TOLERANCE								
>0~6 ±0.10	HTDISPLAY CO., LTD.						DRAWING No. : HC160205C-YF62L-VA	
>6~80 ±0.20							DRAWING TITLE: LCM DRAWING	
							FILE NO. : 8	
>80~240 ±0.30	DESIGN	ZOUYS	05.11.03	STANDARD			REV. : A	SCALE : -
>240~400 ±0.50	CHECKED			TECHNOLOGY			PROJECTION:	UNIT : mm
// ⊥ ◎ ±0.10	APPROVED			Q.A				SHEET : 1/1