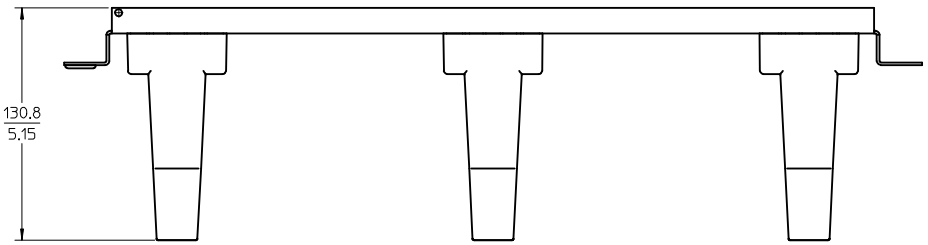

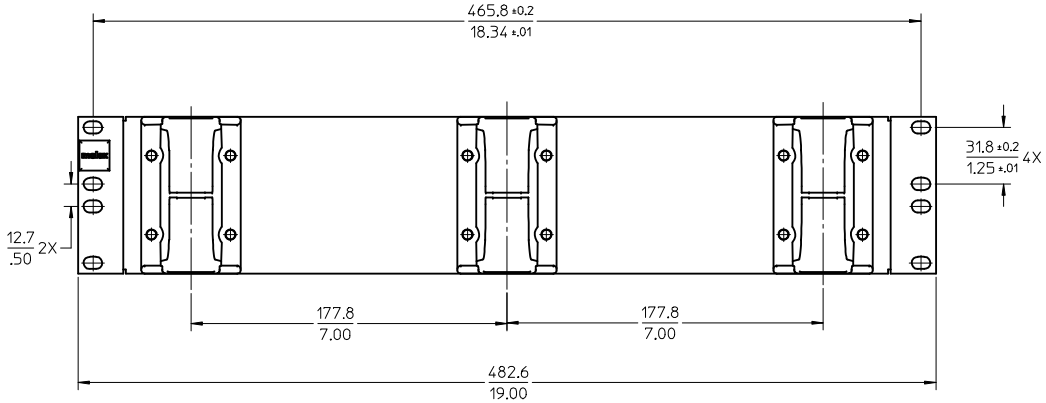

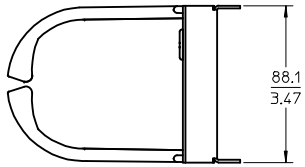

NOTES:

1) MATERIAL & FINISH :
   PANEL : COLD ROLLED STEEL (CRS), GREY OR BLACK POWDER COAT
   RING : POLYCARBONATE (PC), COLOR : BLACK

2) PANEL ASSEMBLY IS PACKAGED IN A BOX WITH HARDWARE KIT.

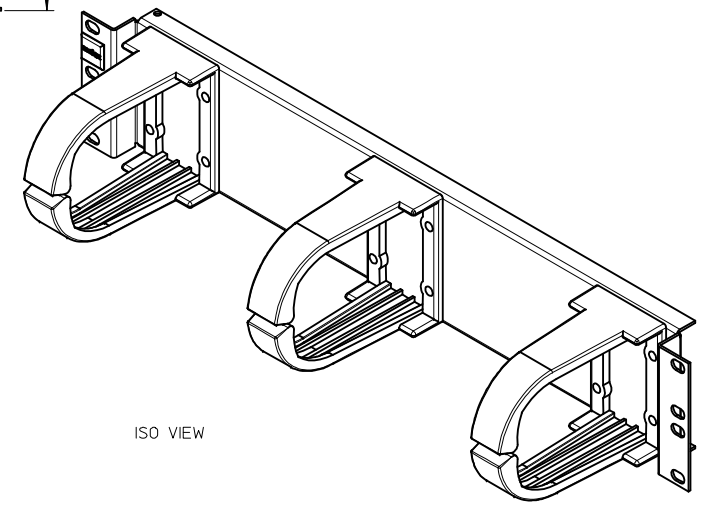

ISO VIEW

PART NO. CHART		
MPN NO.	SAP NO.	DESCRIPTION
25.B058G	180320008	PANEL 2U-3 DEEP RING RUN GRAY
25.B058-04	181080005	PANEL 2U-3 DEEP RING RUN BLACK

ENTER DESCRIPTION
EC NO: MTS2017-0007
DRWN:JKOWSHIKARAN 2016/11/10
CHKD:ANKUMAR02 2017/09/27
APPR:RCG 2017/09/28
DESCRIPTION
REV
A3

QUALITY SYMBOLS
$\sqrt{E_A}$=0
$\sqrt{E_E}$=0
$\sqrt{E_B}$=0

GENERAL TOLERANCES (UNLESS SPECIFIED)

	mm	INCH
4 PLACES	± ---	± ---
3 PLACES	± ---	± ---
2 PLACES	± ---	± .020
1 PLACE	± 0.51	± ---
0 PLACE	±	±
ANGULAR ±---°		

DRAFT WHERE APPLICABLE MUST REMAIN WITHIN DIMENSIONS

DIMENSION STYLE: MM/IN
SCALE: 1:2
DESIGN UNITS: METRIC
THIRD ANGLE PROJECTION

DRAWN BY: SPRASHANTH DATE: 2007/10/25
CHECKED BY: JKUMAR DATE: 2007/10/25
APPROVED BY: JKUMAR DATE: 2007/10/25

TITLE: PANEL 2U - 3 DEEP RING RUN

molex

MATERIAL NO.: SEE CHART
DOCUMENT NO.: SD-18032-009
SHEET NO.: 1 OF 1
SIZE: A2

THIS DRAWING CONTAINS INFORMATION THAT IS PROPRIETARY TO MOLEX INCORPORATED AND SHOULD NOT BE USED WITHOUT WRITTEN PERMISSION

tb_frame_A2_P_AM_T
Rev. G 2012/01/11