NOTES:

1. MATERIAL:
   A) ADAPTER PLATE: COLD ROLLED STEEL (CRS)
   B) CAPTIVE SCREW : ZINC PLATED HARDENED CARBON STEEL.
   C) PHILLIPS PAN HEAD SCREW: GALVANIZED STEEL

2. FINISH:
   ADAPTER PLATE : GOTHIC BLACK TEXTURE (RAL 000 15 00) POWDER COAT.

3. ASSEMBLY IS PACKED INDIVIDUALLY IN A BOX.

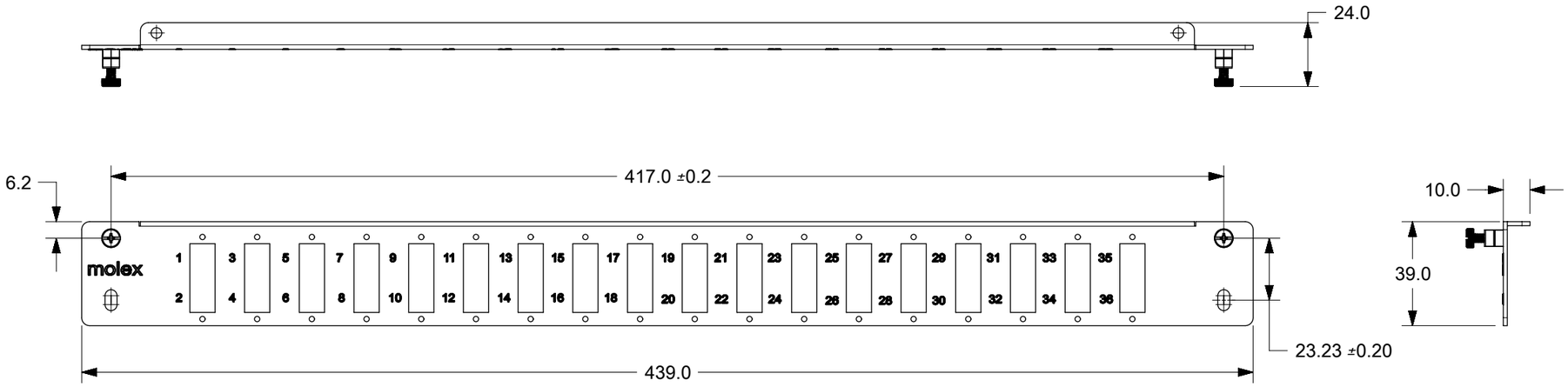

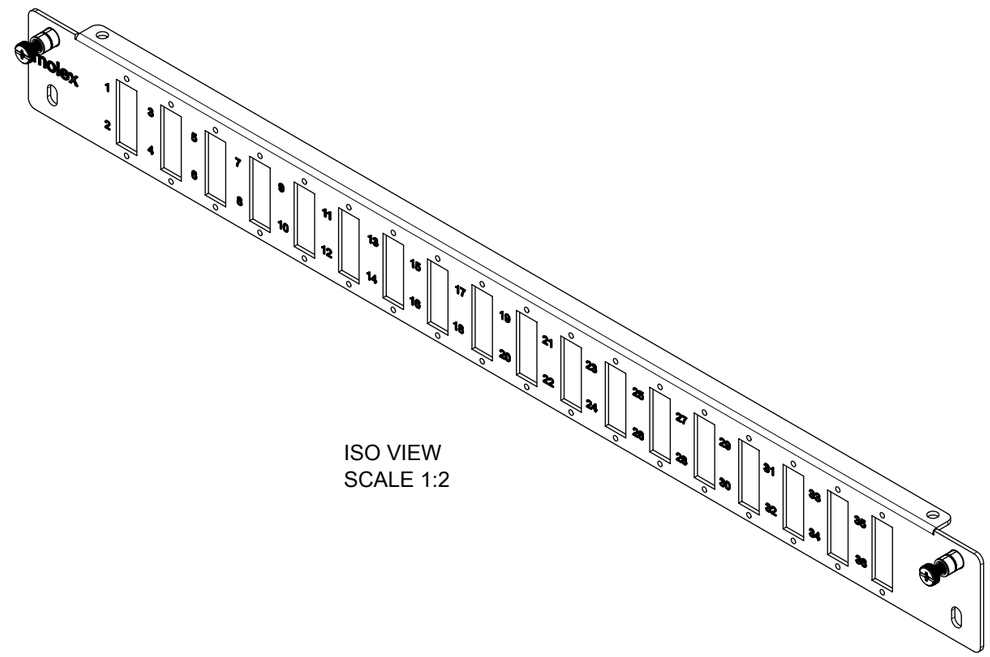

ISO VIEW
SCALE 1:2

PART NUMBER CHART		
MPN NO.	SAP NO.	DESCRIPTION
AFR-00483-04	180600381	ADAPTER PLATE MFE 36F DSC UNLD BLACK

THIS DRAWING CONTAINS INFORMATION THAT IS PROPRIETARY TO MOLEX ELECTRONIC TECHNOLOGIES, LLC AND SHOULD NOT BE USED WITHOUT WRITTEN PERMISSION

SYMBOLS	
E/A	= 0
E/C	= 0
E/P	= 0
S	= 0
▼	= 0
C	= 0
☒	= 0
■	= 0
V	= 0

DIMENSION UNITS	SCALE
mm	1:2

GENERAL TOLERANCES (UNLESS SPECIFIED)

ANGULAR TOL	±	0.5 °
4 PLACES	±	
3 PLACES	±	
2 PLACES	±	
1 PLACE	±	0.5
0 PLACES	±	

DRAFT WHERE APPLICABLE MUST REMAIN WITHIN DIMENSIONS

CURRENT REV DESC:

EC NO: 615758
DRWN: UKOWSHIKARAN 2019/04/11
CHK'D: RCG 2019/05/07
APPR: RCG 2019/05/07

INITIAL REVISION:
DRWN: MTAMBRALLI 2013/06/12
APPR: RCG 2013/07/11

THIRD ANGLE PROJECTION | DRAWING: A3-SIZE | SERIES: 18060

molex

ADAPTER PLATE MFE 36F DSC UNLD - BLACK

PRODUCT CUSTOMER DRAWING

DOCUMENT NUMBER	DOC TYPE	DOC PART	REVISION
SD-18060-073	PSD	001	C

MATERIAL NUMBER	CUSTOMER	SHEET NUMBER
	GENERAL MARKET	1 OF 1

DOCUMENT STATUS	P1	RELEASE DATE	2019/05/07 15:50:17

FORMAT: molex_tb_v5-A3
REVISION: H
DATE: 2018/01/18