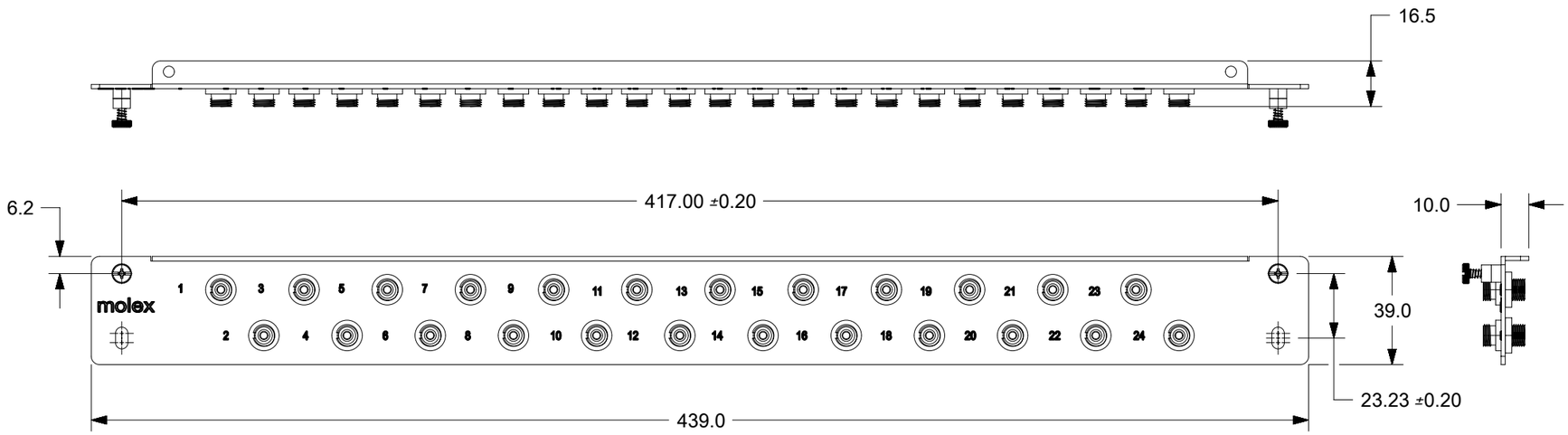

NOTES:

1. MATERIAL:
   A) ADAPTER PLATE: COLD ROLLED STEEL (CRS)
   B) ADAPTER HOUSING : ZINC ALLOY
   C) CAPTIVE SCREWS : ZINC PLATED HARDENED CARBON STEEL
   D) PHILLIPS PAN HEAD THREAD CUTTING SCREWS.
   E) DUST CAP : POLYETHYLENE (PE)
2. FINISH:
   ADAPTER PLATE :GOTHIC BLACK TEXTURE POWDER COAT.
3. ACCOMODATES 24 FC SMPLX ADAPTERS PER PLATE.
4. ASSEMBLY IS PACKAGED INDIVIDUALLY IN A BOX.
   FOR PACKING REFER PK-18607-031.
5. DUST CAPS ARE NOT SHOWN BUT, ASSEMBLED TO ADAPTERS.

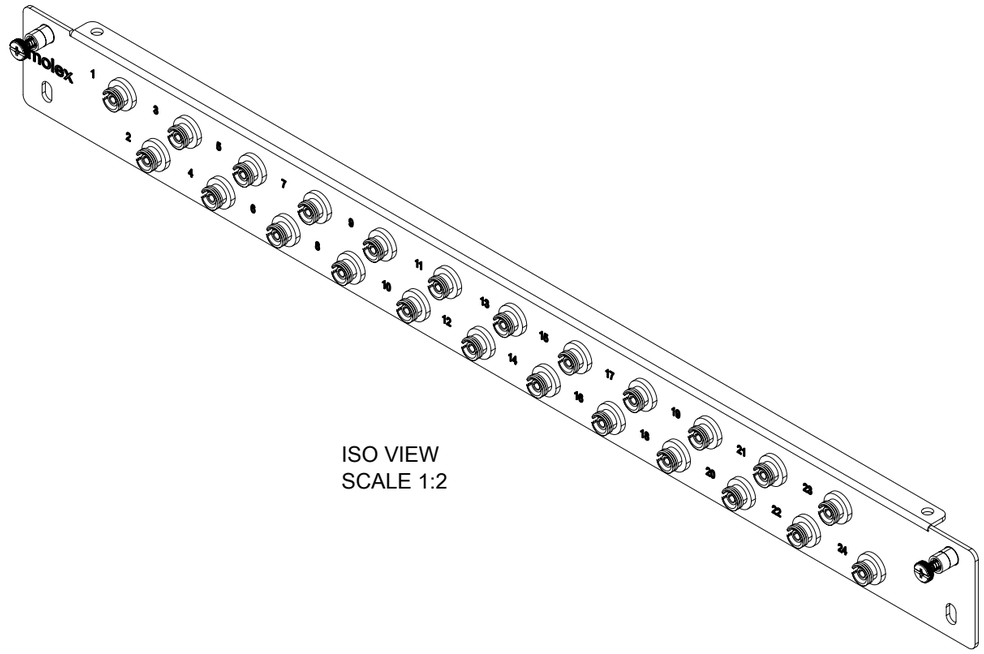

ISO VIEW
SCALE 1:2

PART NUMBER CHART

MPN NO.	SAP NO.	DESCRIPTION
AFR-00464-04	180600430	ADAPTER PLATE MFE 24F FC SM/MM BLACK

SYMBOLS	
E/A	= 0
E/C	= 0
E/E	= 0
S	= 0
▼	= 0
C	= 0
☒	= 0
■	= 0
▽	= 0

THIS DRAWING CONTAINS INFORMATION THAT IS PROPRIETARY TO MOLEX ELECTRONIC TECHNOLOGIES, LLC AND SHOULD NOT BE USED WITHOUT WRITTEN PERMISSION

DIMENSION UNITS	SCALE
mm	1:2

GENERAL TOLERANCES (UNLESS SPECIFIED)

ANGULAR TOL	±	°
4 PLACES	±	
3 PLACES	±	
2 PLACES	±	
1 PLACE	±	0.5
0 PLACES	±	

DRAFT WHERE APPLICABLE MUST REMAIN WITHIN DIMENSIONS

CURRENT REV DESC:

EC NO: 615758
DRWN: UKOWSHIKARAN 2019/04/11
CHK'D: RCG 2019/05/07
APPR: RCG 2019/05/07

INITIAL REVISION:
DRWN: MTAMBRALLI 2012/09/28
APPR: RCG 2013/07/11

THIRD ANGLE PROJECTION | DRAWING: A3-SIZE | SERIES: 18060

molex

ADAPTER PLATE MFE 24F
FC - BLACK

PRODUCT CUSTOMER DRAWING

DOCUMENT NUMBER	DOC TYPE	DOC PART	REVISION
SD-18060-056	PSD	001	C

MATERIAL NUMBER	CUSTOMER	SHEET NUMBER
SEE CHART	GENERAL MARKET	1 OF 1

DOCUMENT STATUS	P1	RELEASE DATE	2019/05/07 15:50:02

FORMAT: master-lb-prod-A3
REVISION: H
DATE: 2018/01/18