REVISIONS						
REV	ECO NO.	DESCRIPTION	BY	DATE	APP'D BY	DATE
1		ORIGINAL RELEASE	JWS	1/31/1986	RRR	2/13/1986
2		REDRAWN	AAM	12/14/1999	RRR	12/14/1999
3	23573	UPDATED & REDRAWN	TonyD	2/20/2015		

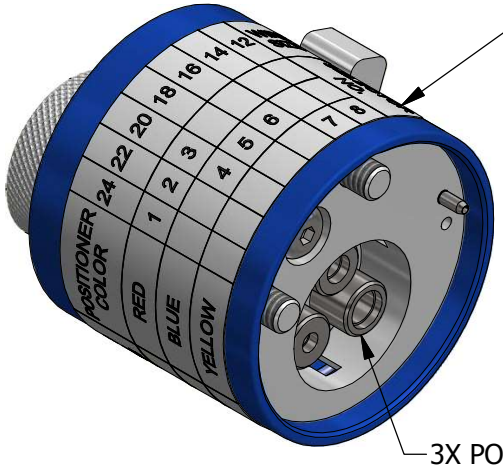

MS27655 MS27490 91, 92, 93, 94	POSITIONER COLOR	24	22	20	18	16	14	12	WIRE SIZE
-20	RED	1	2	3					SELECTOR NO.
-16	BLUE			4	5	6			
-12	YELLOW						7	8	

UNCONTROLLED DOCUMENT WILL NOT BE UPDATED

DIMENSIONS IN INCHES - UNLESS OTHERWISE SPECIFIED

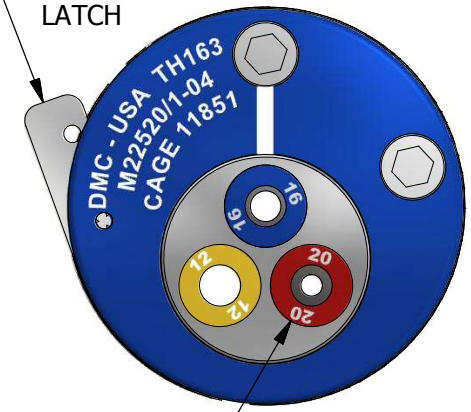

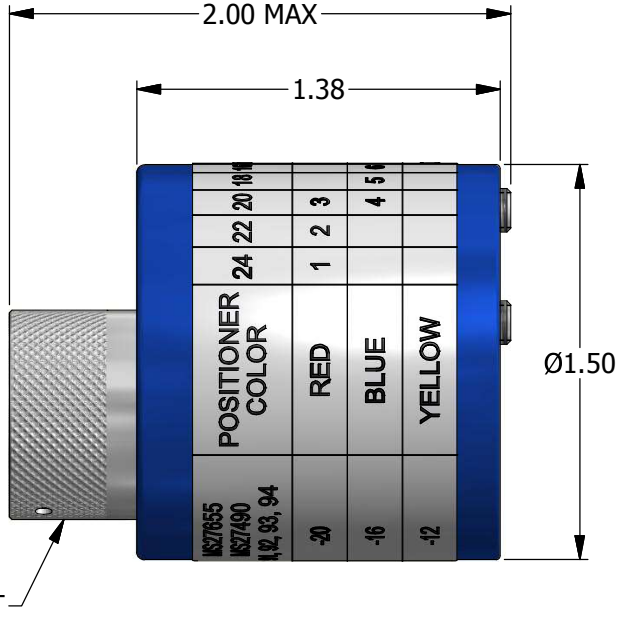

INSERT COLOR	HOLE DIMENSIONS	ADDITIONAL FEATURES
RED	Ø.082 ↧THRU	⌴Ø.096 ↧.050
BLUE	Ø.116 ↧THRU	⌴Ø.136 ↧.047
YELLOW	Ø.166 ↧THRU	⌴Ø.185 ↧.040

MATERIAL	ITEM	PART NO.	QTY.	DESCRIPTION / REMARKS
N/A				

DRN. JWS DATE 1/31/1986
CHK'D. DATE

DANIELS MANUFACTURING CORP.
ORLANDO, FLORIDA
CAGE 11851

RESTRICTED & CONFIDENTIAL

CONFIDENTIAL PROPERTY OF DANIELS MANUFACTURING CORP. NOT TO BE DISCLOSED TO OTHERS. REPRODUCTION OR USED FOR ANY OTHER PURPOSE EXCEPT AS AUTHORIZED IN WRITING BY DANIELS MANUFACTURING. MUST BE RETURNED TO DANIELS MANUFACTURING CORP. ON COMPLETION OF ORDER OR PURPOSES FOR WHICH LENT.

CREATED FROM AN INVENTOR MODEL.
CHANGES MUST BE REFLECTED IN THE 3D PART

DO NOT SCALE DRAWING

HEAT TREAT: N/A

FINISH: N/A

NOTE:
THIS DRAWING IS AN OUTLINE DRAWING OF THE RESPECTIVE DMC PART NUMBER INDICATED. ACTUAL DMC PART NUMBER IS CAD PART NUMBER WITHOUT THE "-ENV" SUFFIX

TITLE: TURRET HEAD (M22520/1-04) ENVELOPE DRAWING

WHERE USED: AF8

SIZE	SCALE	CAD P/N	SHEET
B	2 : 1	TH163-ENV	1 OF 1
		DWG. NO. TH163	REV. 3