STANDARD VERSION

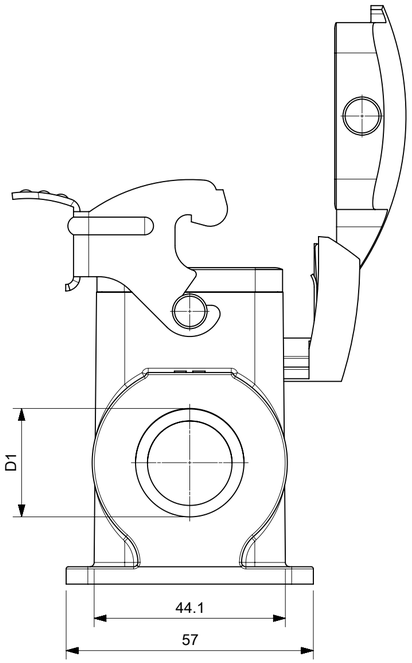

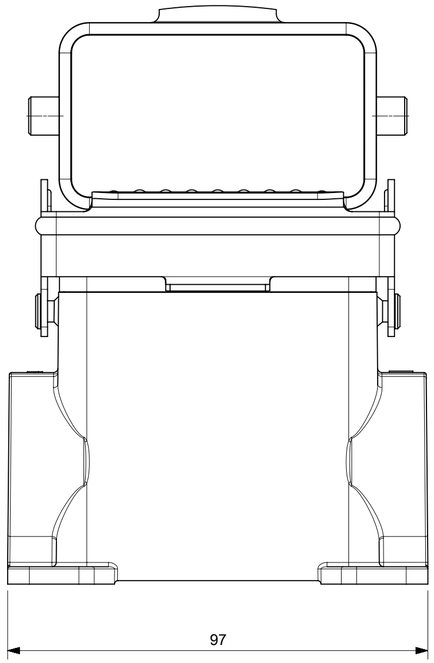

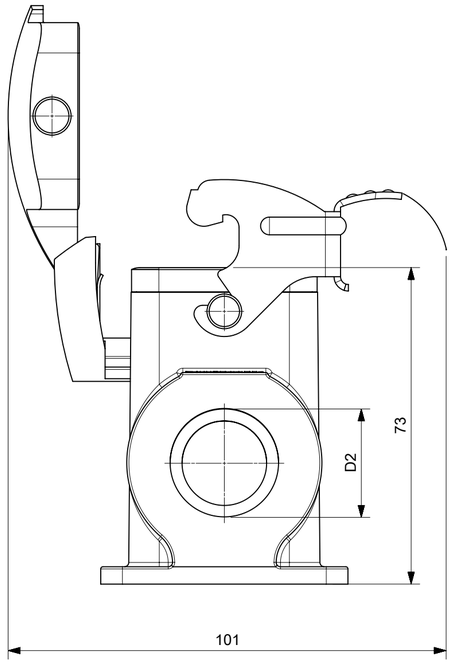

STANDARD HIGH VOLTAGE VERSION

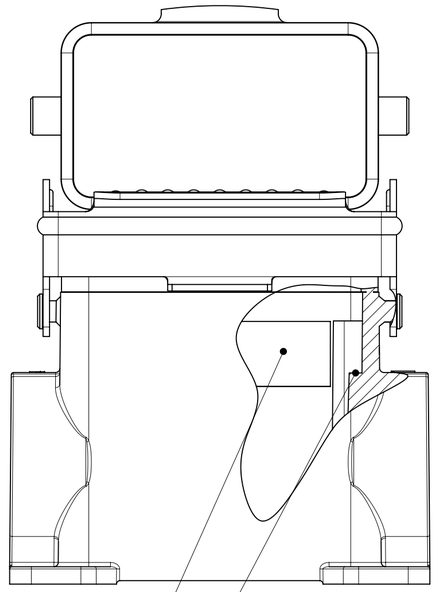

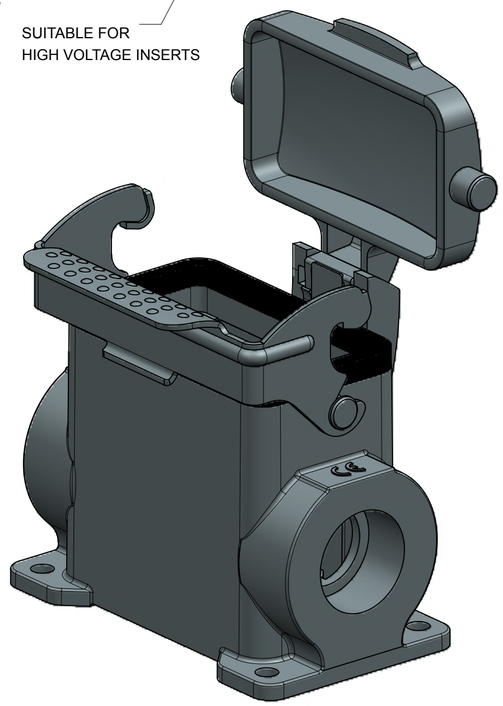

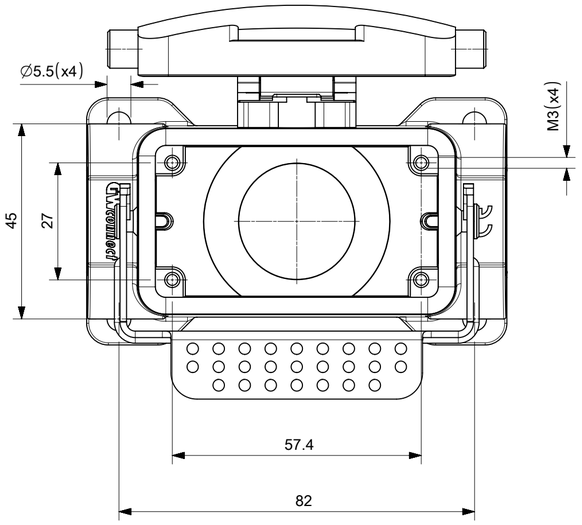

SAP.No.	Eng.No.	TYPE	D1	D2
936011948	7810.7273.0	STANDARD	M25	M25
936011951	7810.7274.0	STANDARD	M 32	-
936011953	7810.7275.0	STANDARD	M 32	M 32
936011956	7810.7276.0	STANDARD	M 40	-
936011958	7810.7277.0	STANDARD	M 40	M 40
936011961	7810.7278.0	STANDARD	Pg 21	-
936011963	7810.7279.0	STANDARD	Pg 21	Pg 21
936011966	7810.7280.0	STANDARD	Pg 29	-
936011968	7810.7281.0	STANDARD	Pg 29	Pg 29
936011950	7810.7273.2	STANDARD HIGH VOLTAGE	M25	M25
936011952	7810.7274.2	STANDARD HIGH VOLTAGE	M 32	-
936011955	7810.7275.2	STANDARD HIGH VOLTAGE	M 32	M 32
936011957	7810.7276.2	STANDARD HIGH VOLTAGE	M 40	-
936011960	7810.7277.2	STANDARD HIGH VOLTAGE	M 40	M 40
936011962	7810.7278.2	STANDARD HIGH VOLTAGE	Pg 21	-
936011965	7810.7279.2	STANDARD HIGH VOLTAGE	Pg 21	Pg 21
936011967	7810.7280.2	STANDARD HIGH VOLTAGE	Pg 29	-
936011970	7810.7281.2	STANDARD HIGH VOLTAGE	Pg 29	Pg 29

THIS DRAWING CONTAINS INFORMATION THAT IS PROPRIETARY TO MOLEX ELECTRONIC TECHNOLOGIES, LLC AND SHOULD NOT BE USED WITHOUT WRITTEN PERMISSION

SYMBOLS: = 0 / = 0 / = 0 / = 0 / = 0 / = 0 / = 0 / = 0

DIMENSION UNITS: mm — SCALE: 1:1

GENERAL TOLERANCES (UNLESS SPECIFIED)

ANGULAR TOL ± °

4 PLACES ±

3 PLACES ±

2 PLACES ±

1 PLACE ±

0 PLACES ±

DRAFT WHERE APPLICABLE MUST REMAIN WITHIN DIMENSIONS

CURRENT REV DESC:

EC NO: 177920

DRWN: AKHEMIRI 2018/06/06

CHK'D: DMERONI 2018/06/06

APPR: AMELZI 2018/06/12

INITIAL REVISION:

DRWN: AKHEMIRI 2018/06/01

APPR: AMELZI 2018/06/12

FIRST ANGLE PROJECTION

DRAWING: A2-SIZE

SERIES: 93601

molex

10B STANDARD AND HIGH VOLTAGE SURFACE MOUNTING HOUSING WITH COVER 1 LEVER HIGH CONSTRUCTION

PRODUCT CUSTOMER DRAWING

DOCUMENT NUMBER	DOC TYPE	DOC PART	REVISION
936011950	PSD	000	A

MATERIAL NUMBER	CUSTOMER	SHEET NUMBER
SEE TABLE	GENERAL MARKET	1 OF 1

DOCUMENT STATUS	P1	RELEASE DATE	2018/06/12 08:11:17

FORMAT: master-tb-prod-A2
REVISION: H
DATE: 2017/10/06