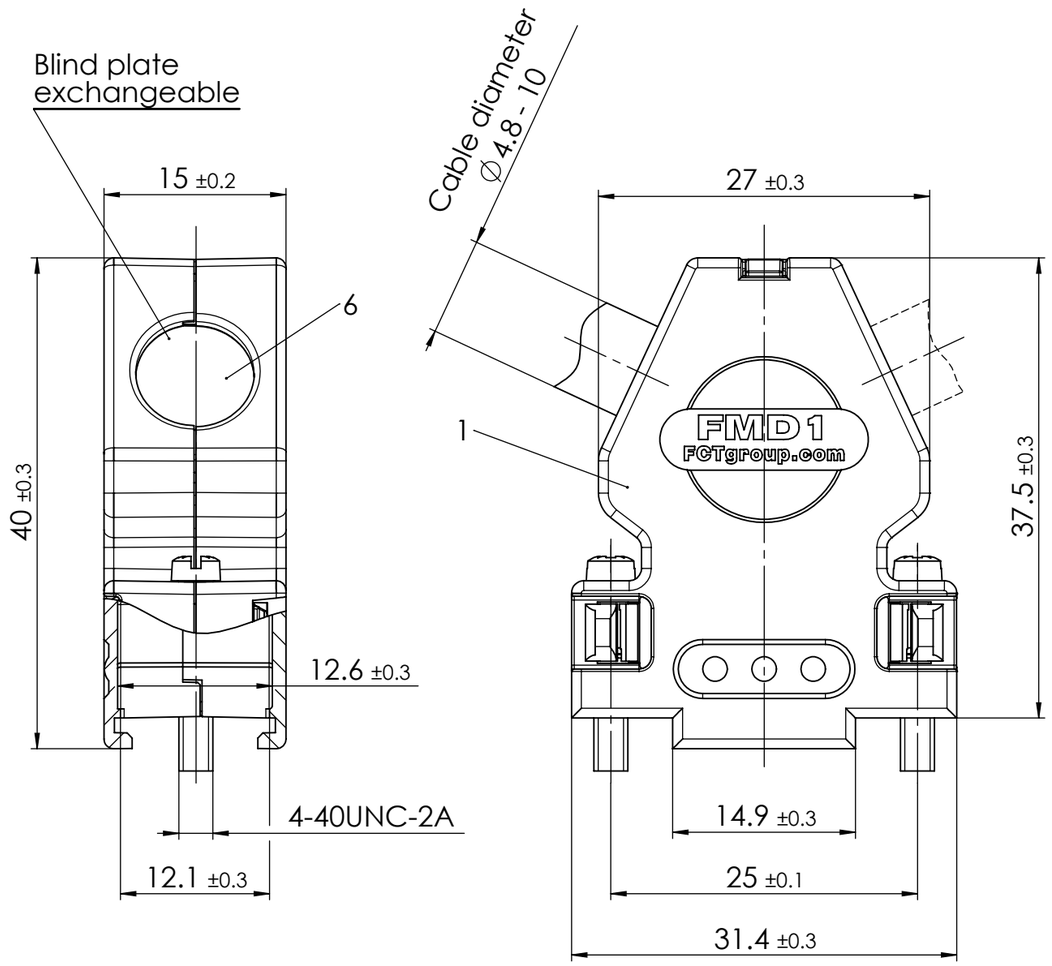

view of the hood without lid

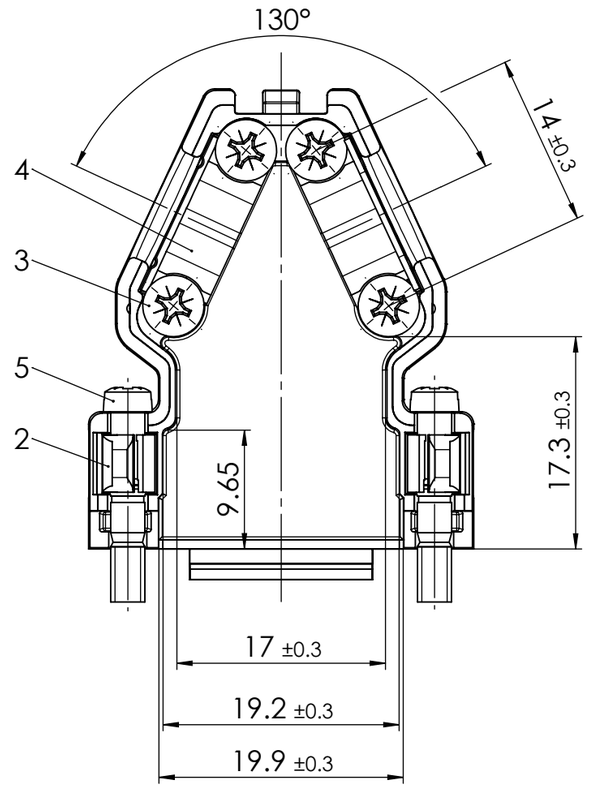

view of the cable clamps
- example for mounting

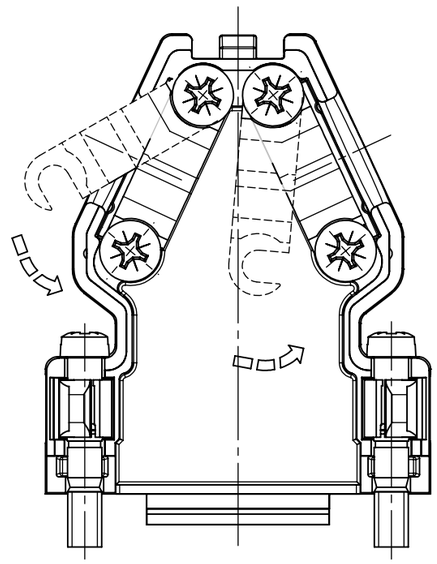

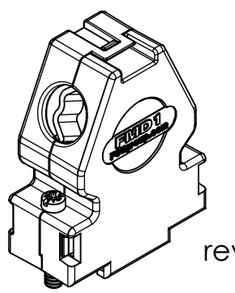

reverse side
1 : 1

RoHS compliant

Metal hood with two cable outlets.
Alternative on one side closed
cable outlet, with Blind plate.

max. torque are 40 Ncm
Hood is snapped together
Part-No. 6 is not mounted

No.	St.	Part	Type Description/Material	Surface plating/Colour/Class
6	1	Blind plate	Stainless steel	blank
5	2	Locking screw	FVS1/5-K1163 4-40 / Steel	nickel plated
4	2	Cable clamp	Steel	tin plated
3	4	Screw	Case hardened steel	zinc plated
2	2	Catch spring	PEI	green
1	1	Hood	FMD1 / Zinc die-cast	nickel plated

SYMBOLS
E = 0
E = 0
E = 0
S = 0
▼ = 0
C = 0
☒ = 0
■ = 0
▽ = 0

THIS DRAWING CONTAINS INFORMATION THAT IS PROPRIETARY TO MOLEX ELECTRONIC TECHNOLOGIES, LLC AND SHOULD NOT BE USED WITHOUT WRITTEN PERMISSION

DIMENSION UNITS: mm
SCALE: 2:1
MEASUREMENTS WITHOUT TOLERANCE ACC. TO: ISO 2768-m

REV.	CH.-NO.
3	24230
2	24130
1	

CURRENT REVISION
DRWN: DRAWN BY ameyerrichte 11-01-2021
APPR: APPR BY hstanisch 11-01-2021

INITIAL REVISION
DRWN: DRAWN BY BWittek 01-12-2011
APPR: APPR BY Carsten.Schöning 05-07-2012

REPLACEMENT FOR:
THIRD ANGLE PROJECTION
DRAWING: A3-SIZE

molex

FCT Metal Hood

PRODUCT CUSTOMER DRAWING

MATERIAL NUMBER: 1731110095
REVISION: 3
DOCUMENT NUMBER: FMD1
CUSTOMER: GENERAL MARKET
SHEET NUMBER: 1 OF 1

COMMENT:
ALL RIGHTS ARE RESERVED BY US FOR THIS DRAWING, WITHOUT OUR PRIOR CONSENT,
IT MAY NEITHER BE DUBLICATED NOR MADE AVAILABLE TO A THIRD PARTY,
AND IT ALSO MAY NOT BE IMPROPERLY USED BY TE RECEIVER, OR A THIRD PARTY.