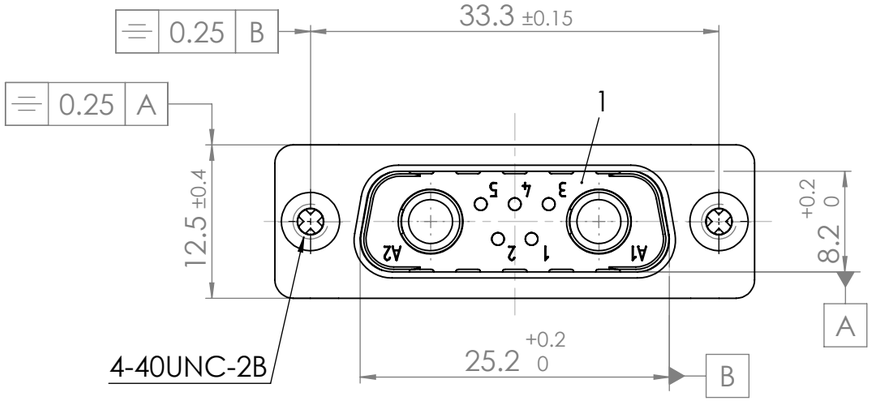

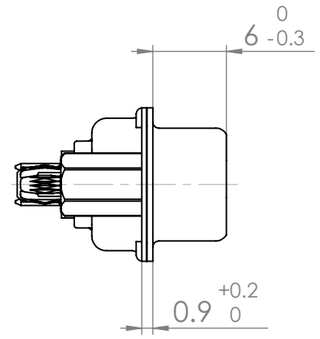

RoHS compliant

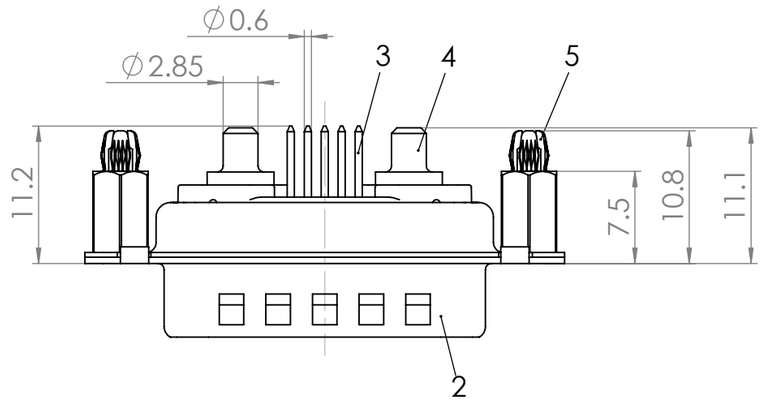

PCB hole pattern, mounting side

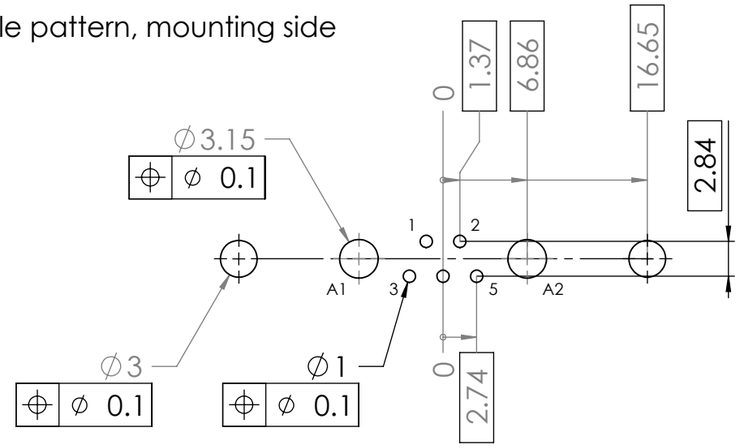

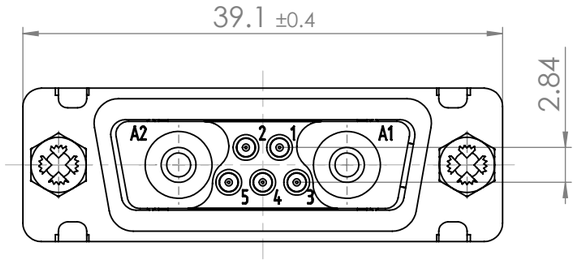

No.	St.	Part	Type Description/Material	Surface plating/Colour/Class
5	2	Snap-in bolt	PCB 1.6mm / Brass	tin plated
4	2	High power contact	FMP010P104	20A
3	5	Signal contact	P1 / Brass	0.8µm Au
2	1	Shell	Steel	tin plated
1	1	Insulator	PBT (-55°C - +130°C)	green

REV.	DATE	CH.-NO.
1		

Measurement without tolerance occ. to ISO 2768-m

SCALE 2:1

	NAME / DATE
DRAWN	sschref 10-01-2005
CHECKED	aschiekofer 10-01-2005

FCT a molex company

ORIGINAL: DIN A3-DRAWING AS A FILE

TITLE

D-Sub Mixed-Layout Connector

DWG.NO. FM7W2P1-1410

REV. 1

REPLACEMENT FOR:

PAGES 1

COMMENT:
ALL RIGHTS ARE RESERVED BY US FOR THIS DRAWING, WITHOUT OUR PRIOR CONSENT,
IT MAY NEITHER BE DUBLICATED NOR MADE AVAILABLE TO A THIRD PARTY,
AND IT ALSO MAY NOT BE IMPROPERLY USED BY TE RECEIVER, OR A THIRD PARTY.