FOR-1754 Rev.1.1

Pitch range in mm			Naminal dimension range in mm					—
to 6	over 6 to 10	over 10 to 24	to 30	over 30 to 60	over 60 to 100	over 100 to 150	over 150	⌒ ▱
±0.10	±0.15	±0.25	±0.2	±0.3	±0.5	±0.7	±1.0	0.05/10

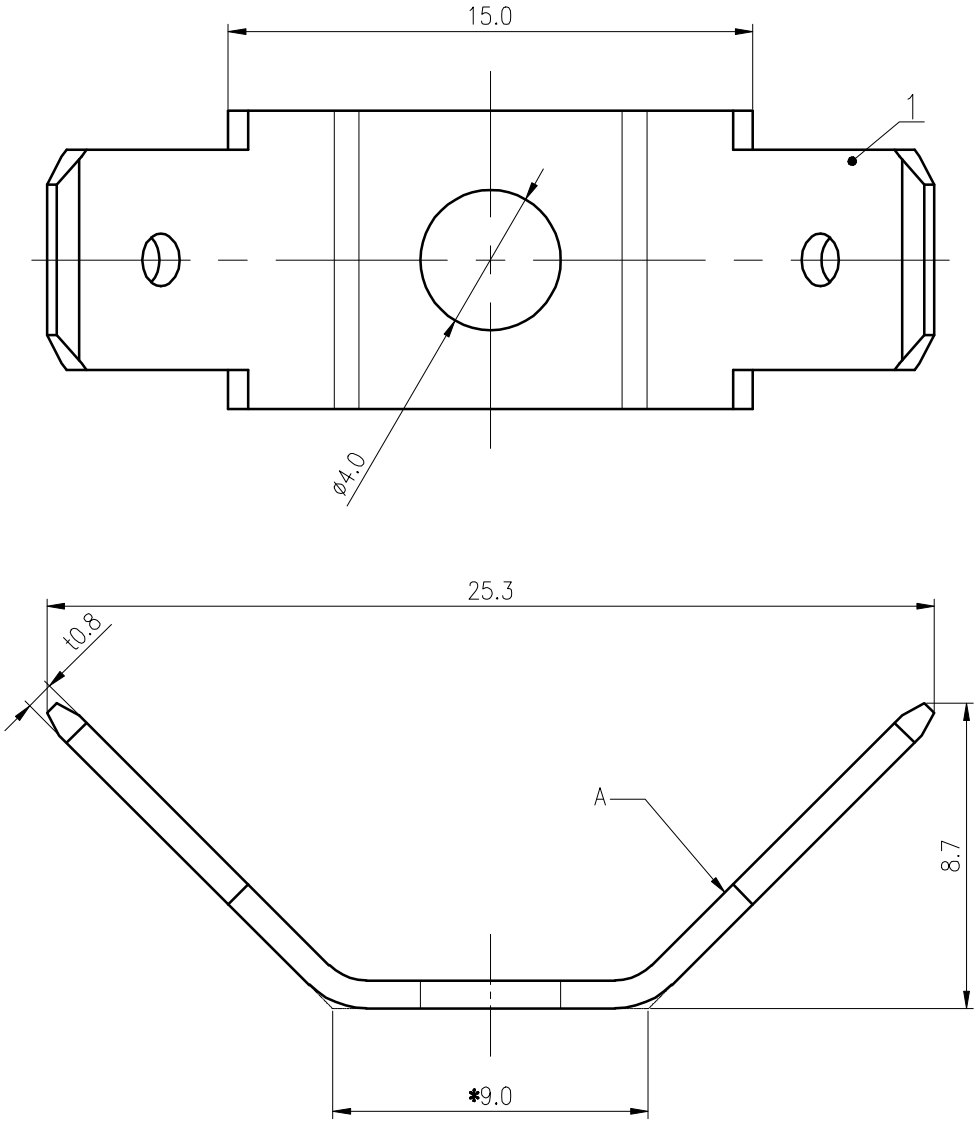

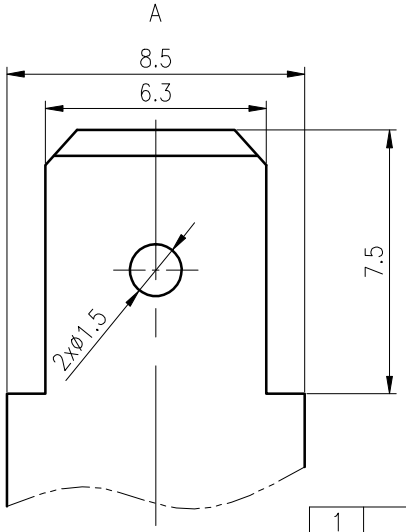

文管中心
研发专用
2020.04.11
(仅限内部使用,对外无效)

ITEM	NAME OF PART	MATERIAL	NOTES
1	Pin header	Copper alloy	Sn Plated

额定电流/Rated Voltage(V)/Current(A)	30
符合RoHS环保要求/Conform to RoHS	Yes

REV	ECN	DESCRIPTION	DRFT	DATE

MATERIAL: /
SURFACE: /
MAT NO.: /
STATUS: /
APPD: Zhu WM 2020.04.11
CHKD: Gao WG 2020.04.11
DRFT: Wu NK 2020.04.11
SIZE: A4
mm (inch)

OFFICIAL ELECTRONIC

NAME: K2-00A(H)
DRAWING NO.: K2-C01
REV: T0
TYPE: CUSTOMER DRAWING
SCALE: 5:1
SHEET: 1/1