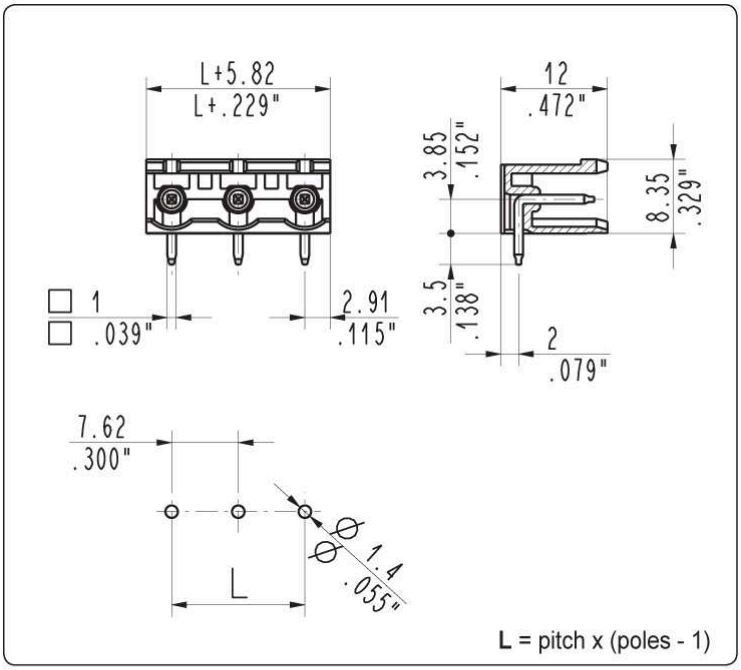

CIM__9A7 — 90°, side stackable male

7.62 mm / .300" pitch

Poles	Code	Pcs/pack.	W [kg]*	*Pcs/Ind.**	*W [kg]**
02	CIM029A7	400	0,38	*2000*	*1,92*
03	CIM039A7	250	0,36	*1500*	*2,16*
04	CIM049A7	200	0,38	*1000*	*1,92*
05	CIM059A7	150	0,36	*1000*	*2,40*
06	CIM069A7	125	0,36	*750*	*2,16*
07	CIM079A7	100	0,34	*500*	*1,68*
08	CIM089A7	75	0,29	*500*	*1,92*
09	CIM099A7	75	0,32	*500*	*2,16*
10	CIM109A7	75	0,36	*250*	*1,20*
11	CIM119A7	50	0,26	*250*	*1,32*
12	CIM129A7	50	0,29	*250*	*1,44*