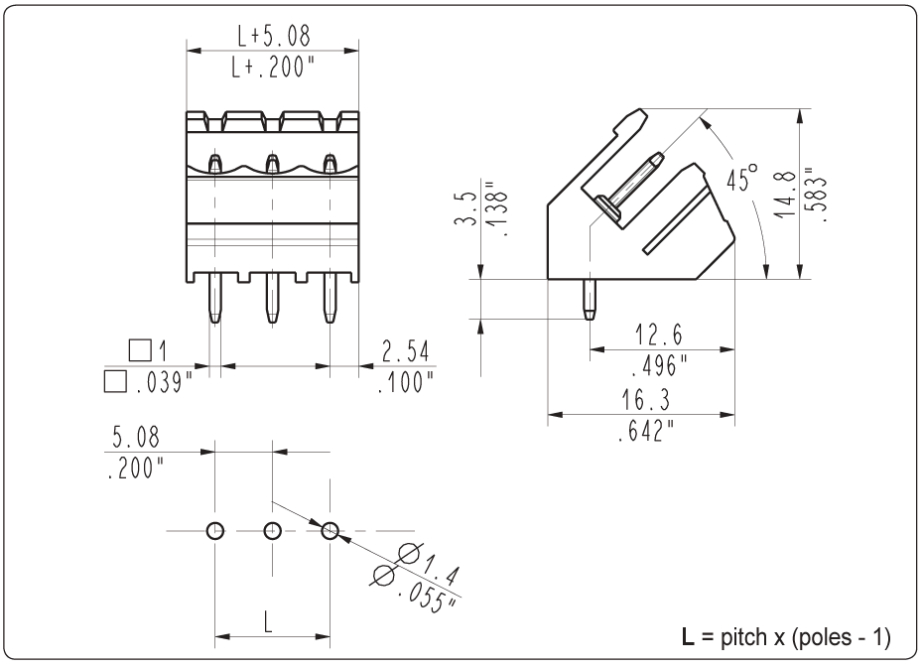

CIM__4A5 — 45°, side stackable male

5.08 mm / .200" pitch

Poles	Code	Pcs/pack.	W [kg]*	*Pcs/Ind.***	*W [kg]**
02	CIM024A5	400	0,28	***1500***	***1,05***
03	CIM034A5	250	0,26	***1000***	***1,05***
04	CIM044A5	175	0,25	***750***	***1,05***
05	CIM054A5	125	0,22	***500***	***0,88***
06	CIM064A5	100	0,21	***500***	***1,05***
07	CIM074A5	75	0,18	***500***	***1,23***
08	CIM084A5	75	0,21	***500***	***1,40***

Max 8 poles can be combined